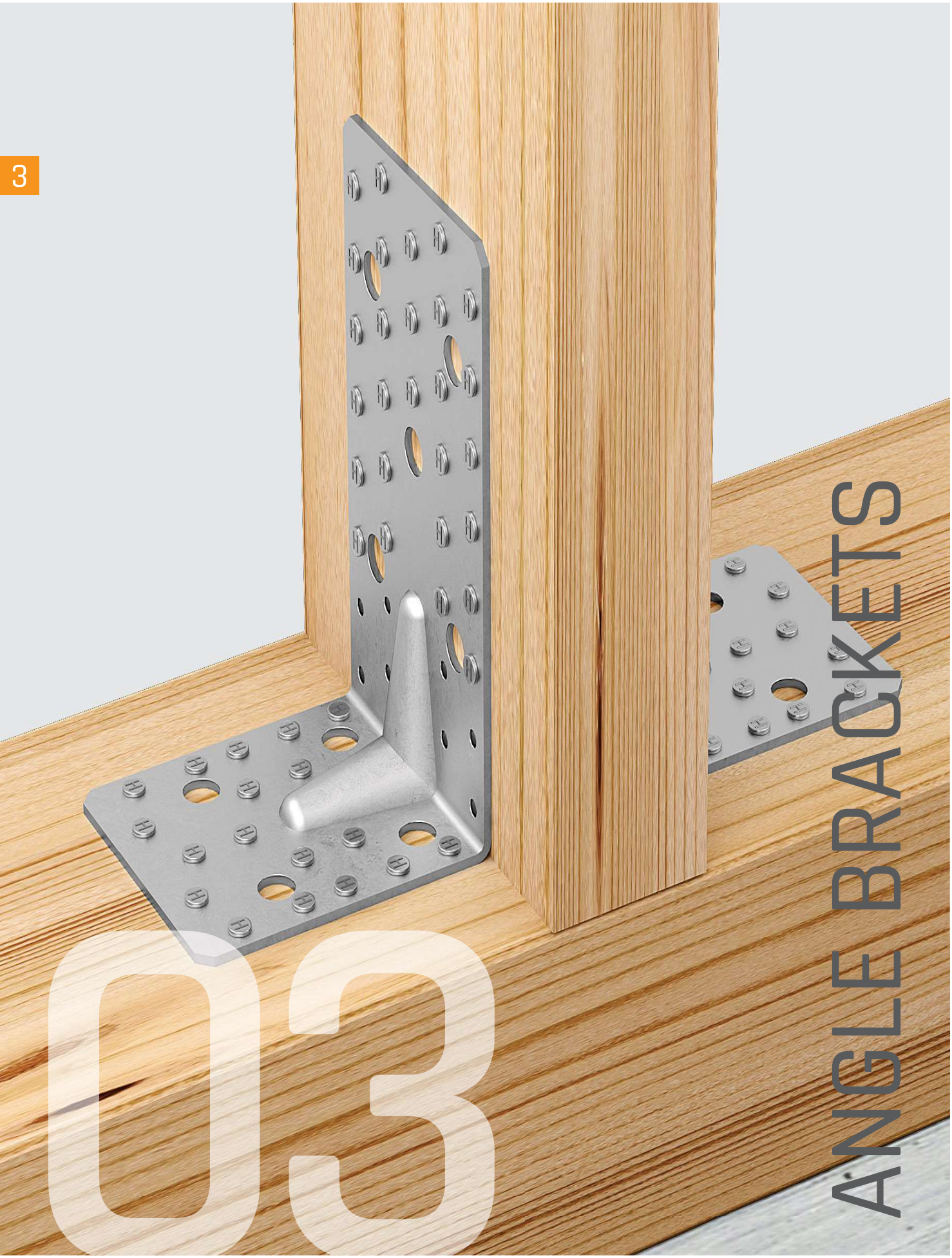

03 ANGLE BRACKETS

GREENLINE TOPLINE

ANGLE BRACKETS

ANGLE BRACKETS TOP 80 / TOP 120

Advantages

- No bothersome centre rib during processing
- Optimised hole pattern
- Full nail fitting always possible
- High stability due to special, discreet corrugation
- Type 80 as an alternative to the “size 90 bracket”
- **GREEN**LINE = resource-saving manufacturing



Introduction to statics **from page 110** / Products & statics **from page 120**

ANGLE BRACKET 110/170 S

Advantages

- Universal use for higher loads
- 9 bolt holes Ø 13 mm
- Perfectly suited to take loads F_2 and F_3

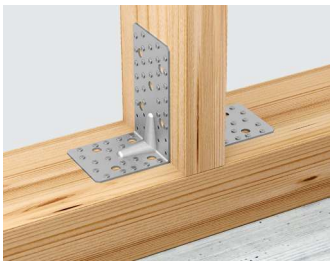



Introduction to statics **from page 110** / Products & statics **from page 132**

ANGLE BRACKET TOP KR 90E (EXTRA)

Advantages

- 40 % lighter in comparison to 90 x 90 x 65 x 2.5 mm
- High stability due to raised edge on both sides
- Versatile in use
- Alternative to different brackets such as 70 x 70 x 55 mm and 90 x 90 x 65 mm (for use under consideration of the necessary loads)
- Very good for loads due to the outer rib F_2/F_3 and F_1 suitable





Introduction to statics **from page 110** / Products & statics **from page 124**

ANGLE BRACKETS KR

Advantages

- For connections between timber/timber; timber/concrete For use on timber/masonry etc.
- Due to the ribs in the bending radius, KR angle brackets are very sturdy, economical and affordable in use for extreme loads
- By making use of the Greenline series, you receive products with resource-saving manufacturing. This gives you an ecologically and economic advantage



Introduction to statics **from page 110** / Products & statics **from page 134**

ANGLE BRACKETS

ASSORTMENT

3

	Height [mm]	Length [mm]	Width [mm]	Basics Statik & Diagramme from page	Products & Statik from page	Products Made of V4A from page
ANGLE BRACKET TOP 80/120	80-120	60	55	110	120	
ANGLE BRACKET 70X70X2.0	70	70	55	110	122	293
ANGLE BRACKET 70X70 GREENLINE	70	70	55	110	122	
ANGLE BRACKET TOP KR90E	95	85	65	110	124	
ANGLE BRACKET 90X90X2.5	90	90	65	110	128	293
ANGLE BRACKET 90X90 GREENLINE	90	90	65	110	126	
ANGLE BRACKET 100X100X3.0	100	100	90	110	130	293
ANGLE BRACKET 100X100 GREENLINE	105	105	90	110	130	
STRUT CONNECTOR 135 DEGREES	90-100	90-100	65-90		132	
ANGLE BRACKET TYPE 110/170L	170	110	95	110	132	
ANGLE BRACKET KR 3 MM	95-285	88	65	110	134	
ANGLE BRACKET KR 4 MM	95-285	88	65	110	134	
ANGLE BRACKET TYPE 50/80	90	50	50-80	110	138	
ANGLE BRACKET TYPE 110	90	50	110	110	138	
ANGLE BRACKET TYPE 55/80	80	60	55	110	140	
ANGLE BRACKET TYPE 60/100	100	60	60	110	140	
CONSOLE ANGLE	120-200	54	60	110	142	
ANGLE BRACKET TYPE 40/45	50-90	50-90	40-45	110	144	
ANGLE BRACKET TYPE 40/90	90	90	40	110	146	294
ANGLE BRACKET TYPE 40/120	120	95	40	110	146	
ANGLE BRACKET TYPE 692	65	65	90	110	146	

ANGLE BRACKETS

ASSORTMENT

	Height	Length	Width	Basics Statics & Diagrams from page	Products & Statics from page	Products Made of V4A from page
NAIL PLATE BRACKET	40-200	40-100	20-100		**148**	**294**
EXTRA THICK 4 MM	130-160	70	80-100	**110**	**150**	
MOUNTING BRACKET	90	60	60	**110**	**152**	
ENTRANCE DOOR BRACKET	70	30	60		**158**	
Z-CONNECTOR	40	75	30		**158**	
CHAIR BRACKET	25-120	25-120	15-20		**159**	
ANGLE BRACKET THICK 3-5 MM	40-180	40-180	20		**159**	
CONCRETE BRACKET	75-150	75	60		**156**	
CORNER ANGLE BRACKET	40	40	100-250		**158**	

CE symbol

Steel with indication of the steel quality and galvanisation

Stainless steel with material number

Timber/timber connection

Timber/concrete-connection

Usage class 1
Moisture content in the building materials that corresponds to a temperature of 20° C and a relative humidity of the ambient air that only exceeds a value of 65% for a few weeks per year, e.g. in the case of buildings that are closed on all sides and heated.
Comment: In UC 1, the average moisture content of most softwoods does not exceed 12 %.

Usage class 2
Moisture content in the building materials that corresponds to a temperature of 20° C and a relative humidity of the ambient air that only exceeds a value of 85% for a few weeks per year, e.g. in the case of open buildings covered by a roof.
Comment: In UC 2, the average moisture content of most softwoods does not exceed 20 %.

Usage class 3
Includes climatic conditions that lead to higher moisture contents than in UC 2, e.g. structures that are exposed to the weather without protection.
Eurocode 5 / DIN EN 1995-1-1 section 2.3.1.3

ANGLE BRACKETS

APPLICATIONS

3

Application:
Timber/timber; timber/concrete, steel connections

Materials:

350 GD Z275 | 250 GD Z275 | 235 JR feuerverzinkt | A4 1.4571

Material thicknesses:
1.5 / 2.0 / 2.5 / 3.0 / 4.0 / 6.0 / 8.0 mm
More on request.

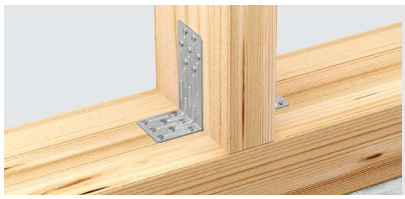

Sleeper **Style**



Sleeper **Style**



Sleeper **Concrete**



Cross



Sleeper **Concrete**



BSH **Concrete**

For use in usage classes

NKL 1 | NKL 2 | NKL 3

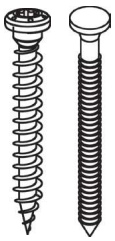

Connecting element:

GH threaded nails 4.0 x 35 / 40 / 50 / 60 / 75 / 100 mm
GH screws 5.0 x 25 / 35 / 40 / 50 / 60 / 70 mm

Bolt, dowel or concrete anchor M10, M12

Connecting elements from page 274

VASTAHL



12

STAINLESS STEEL PRODUCTS

STAINLESS STEEL PRODUCTS

JOIST HANGER V4A, EXTERIOR AND INTERIOR

Standard joist hangers for connections between
- Timber/timber
- Timber/OSB via intermediate layer
- Timber/OSB only on timber board materials
- Timber/concrete
- Timber/steel



Products **from page 292**

ANGLE BRACKETS V4A

Angle brackets can be used for simple and quick connections between timber/timber, timber/concrete, timber/masonry, etc.



Products **from page 293**

NAIL PLATE BRACKETS V4A

Nail plate brackets are used in a range of connections. Whether roofing or interior development, landscaping or for simple cross or joist connection.



Products **from page 294**

RAFTER ANCHORS V4A

Rafter anchors are used for connecting crossing timbers and serve to secure lifting loads.

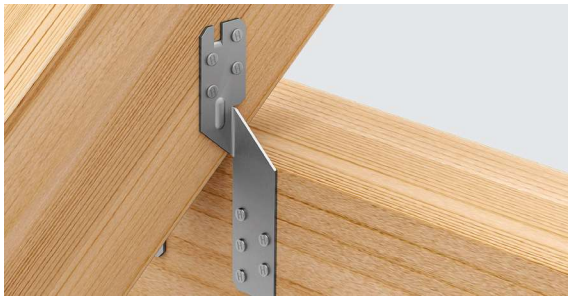

Products **from page 295**

THREADED NAILS V4A

Threaded nails are used where nails are stressed due to pull-out and shearing. They are driven into the timber just like nails, but hold like a screw. There is a tapered shoulder under the flat head, which means that the hole in the GH connector is always completely filled when the nail is driven in, resulting in force-fit, centred fastening. GH threaded nails are used for fixing GH timber connectors in timber construction, engineering timber construction, carpentry work, building trades, etc.

Products on page 295

STAINLESS STEEL PRODUCTS

ASSORTMENT

		Width [mm]	Height [mm]		Products from page
JOIST HANGER TYPE 04 COMBI		60-140	100-180		**292**
JOIST HANGER TYPE I 04 COMBI		60-140	100-180		**292**

		Height [mm]	Length [mm]	Width [mm]	Products from page
ANGLE BRACKET TYPE 55 / 70		70	70	55	**293**
ANGLE BRACKET TYPE 65 / 90 S		90	90	65	**293**
ANGLE BRACKET TYPE 90 / 100 S		100	100	90	**293**
ANGLE BRACKET TYPE 40 / 90		90	90	40	**294**
NAIL PLATE BRACKET		40-60	40-60	40-60	**294**
RAFTER ANCHORS			170-250	36	**295**

		Ø [mm]	Length [mm]		Products from page
THREADED NAILS		4-6	40-60		**295**

CE symbol

Stainless steel with material number

Timber/timber connection

Timber/concrete-connection

Timber/metal-connection

GH wood connectors are made exclusively of material 1.4571 (V4A). The material 1.4571 complies with the specifications in Eurocode 5 and fulfils the requirements of usage class 3. Fastening elements such as threaded nails, screws or dowels must also fulfil the requirements of usage class 3. The load capacities may need to be checked depending on the application.

Usage class 1
Moisture content in the building materials that corresponds to a temperature of 20° C and a relative humidity of the ambient air that only exceeds a value of 65% for a few weeks per year, e.g. in the case of buildings that are closed on all sides and heated.
Comment: In UC 1, the average moisture content of most softwoods does not exceed 12 %.

Usage class 2
Moisture content in the building materials that corresponds to a temperature of 20° C and a relative humidity of the ambient air that only exceeds a value of 85% for a few weeks per year, e.g. in the case of open buildings covered by a roof.
Comment: In UC 2, the average moisture content of most softwoods does not exceed 20 %.

Usage class 3
Includes climatic conditions that lead to higher moisture contents than in UC 2, e.g. structures that are exposed to the weather without protection.
Eurocode 5 / DIN EN 1995-1-1 section 2.3.1.3

ETA-09 0323

A4 1.4571

NKL 3

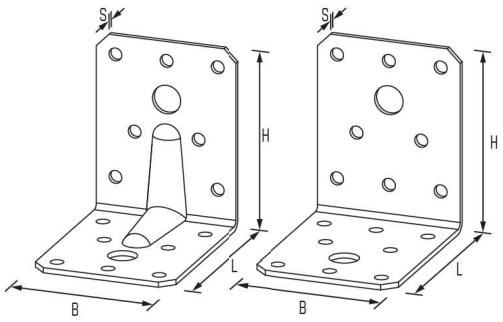

ANGLE BRACKETS

TYPE 55/70 V4A STAINLESS STEEL

Art. No.	Rib	Dimensions [mm]							nN	nBo	EAN	Weight	Pallet	PU		
		H	x	L	x	W(B)	x	T(S)	Ø 5	Ø 11	4019346	kg				
5501SA4	with	70	x	70	x	55	x	2,0	14	2	220145	0.104	4800	100	■	■
5502SA4	without	70	x	70	x	55	x	2,0	16	2	220108	0.103	4800	100	■	■

ETA-09 0323

A4 1.4571

NKL 3

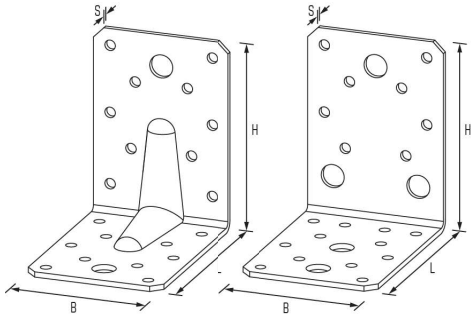

ANGLE BRACKETS

TYPE 65/90 V4A STAINLESS STEEL

Art. No.	Rib	Dimensions [mm]							nN	nBo	EAN	Weight	Pallet	PU		
		H	x	L	x	W(B)	x	T(S)	Ø 5	Ø 11	4019346	kg				
6503SA4	with	90	x	90	x	65	x	2,5	20	2	221600	0.185	4800	100	■	■
6504SA4	without	90	x	90	x	65	x	2,5	20	5	221617	0.185	4800	100	■	■

ETA-09 0323

A4 1.4571

NKL 3

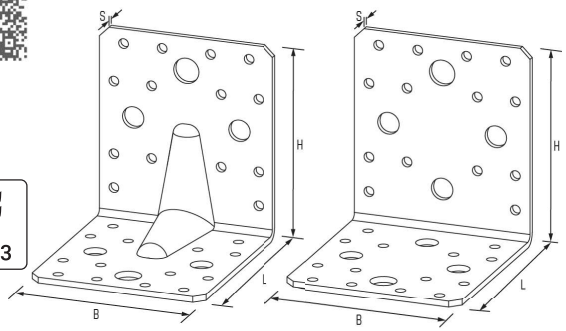

ANGLE BRACKETS

TYPE 90/100 V4A STAINLESS STEEL

Art. No.	Rib	Dimensions [mm]							nN	nBo	nBo	EAN	Weight	Pallet	PU		
		H	x	L	x	W(B)	x	T(S)	Ø 5	Ø 11	Ø 13	4019346	kg				
9003SA4	with	100	x	100	x	90	x	2,5	28	4	4	220078	0.294	3000	50	■	■
9004SA4	without	100	x	100	x	90	x	2,5	28	6	6	220085	0.294	3000	50	■	■

Other items and dimensions in stainless steel A4 (rust-free) available on request

ANGLE BRACKETS

TYPE 40/90 V4A STAINLESS STEEL

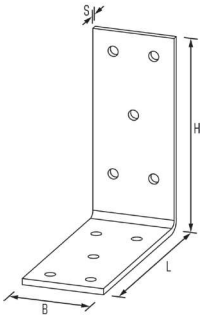

ETA-09 0322

NKL 3

A4 1.4571

Art. No.	Dimensions [mm]							nN	EAN	Weight	Pallet	PU		
	H	x	L	x	W(B)	x	T(S)	Ø 5	4019346	kg				
994A4	90	x	90	x	40	x	2,0	10	220115	0.114	5100	100	■	

NAIL PLATE BRACKES

V4A STAINLESS STEEL

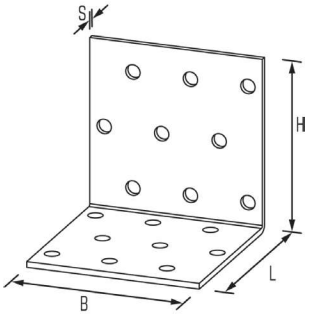

ETA-13 0900

NKL 3

A4 1.4571

Art. No.	Dimensions [mm]							nN	EAN	Weight	Pallet	PU		
	H	x	L	x	W(B)	x	T(S)	Ø 5	4019346	kg				
10500A4	40	x	40	x	40	x	2,0	8	221402	0.046	14000	200	■	
10521A4	50	x	50	x	40	x	2,0	8	221419	0.073	14000	200	■	
10502A4	60	x	60	x	40	x	2,0	14	220139	0.069	6600	150	■	
10504A4	60	x	60	x	60	x	2,0	18	221426	0.103	7000	100	■	
10526A4	60	x	60	x	60	x	2,5	18	220122	0.130	7000	100	■	

Other items and dimensions in stainless steel A4 (rust-free) available on request

ETA-10 0007

A4 1.4571

NKL 3

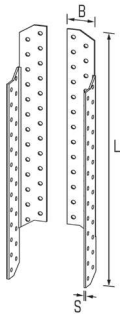

RAFTER ANCHORS

V4A STAINLESS STEEL

Art. No.	Dimensions [mm]					nN	EAN	Weight	Pallet	PU		
	L	x	W(B)	x	T(S)	Ø 5	4019346	kg				
100501A4	170	x	36	x	2,0	2x10	115206	0.092	8000	100	■	
100502A4	210	x	36	x	2,0	2x14	115213	0.128	8000	100	■	
100503A4	250	x	36	x	2,0	2x18	115282	0.165	4500	100	■	

A4 1.4404

NKL 3

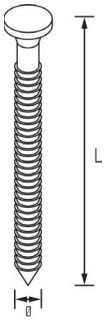

THREADED NAILS

V4A STAINLESS STEEL

Art. No.	Dimensions [mm]			EAN	Weight	Pallet	Outer box	PU
	Ø	x	L	4019346	kg			
4044A4	4,0	x	40	221006	0.453	120000	3000	250
4055A4	4,0	x	50	221013	0.560	120000	3000	250
4066A4	4,0	x	60	221020	0.683	120000	3000	250
6066A4	6,0	x	60	221037	1.525	50000	-	200

Other items and dimensions in stainless steel A4 (rust-free) available on request